REVISIONS					
MF	ZONE	LTR	DESCRIPTION	DATE	APPR

NOTES:

1. MAKE FROM PART NO. 5013206, ALTER IN ACCORDANCE WITH THE FOLLOWING NOTES.
2. POLISH BOTH ENDS OF PIN 16√ PRIOR TO APPLICATION OF PROTECTIVE FINISH.
3. FINISH 3.3.1 OF MIL-STD-171.
4. MIL-W-13855 APPLIES.

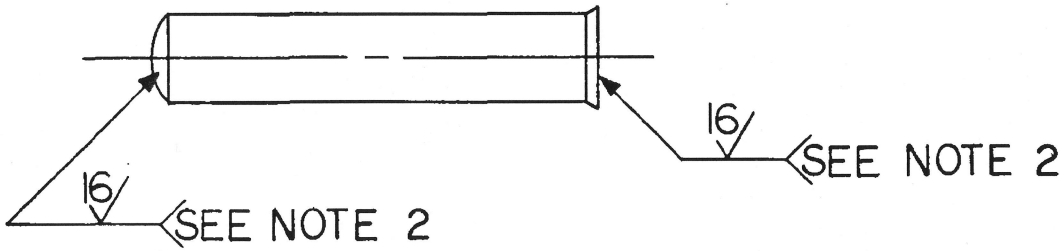

ALTERED ITEM DRAWING

PART NO. 12006312

MECHANICAL PROPERTIES						
YS MIN						
YS MAX						
EL 2						
RA						
BH		F12006306	PISTOL, M15			
RH		NEXT ASSY	USED ON			
		APPLICATION				

UNLESS OTHERWISE SPECIFIED DIMENSIONS ARE IN INCHES
TOLERANCES:
ANGLES ±
3 PLACE DECIMALS ±
2 PLACE DECIMALS ±

MATERIAL

FINAL PROTECTIVE FINISH
SEE NOTE 3

CONTRACT NO:
DATE 19 JUN 73
PREP A. Handley
CHK R. W. DeArmond
ENGR E. Winter
SUBMITTED
APPROVED A. A. Cole

DEPT OF THE ARMY
U.S. ARMY WEAPONS COMMAND
ROCK ISLAND, ILLINOIS, 61201

PIN, HAMMER

SIZE	CODE IDENT NO.	DRAWING NO.
B	19204	1200631

SCALE | SHEET 1 OF

REVISIONS					
MF	ZONE	LTR	DESCRIPTION	DATE	APPRO

NOTES:

1. MAKE FROM PART NO. 6501828, ALTER AS SHOWN.
2. POLISH ALL OVER EXCEPT AS NOTED 16√ PRIOR TO APPLICATION OF PROTECTIVE FINISH.
3. FINISH 3.3.1 OF MIL-STD-171
4. MIL-W-13855 APPLIES.

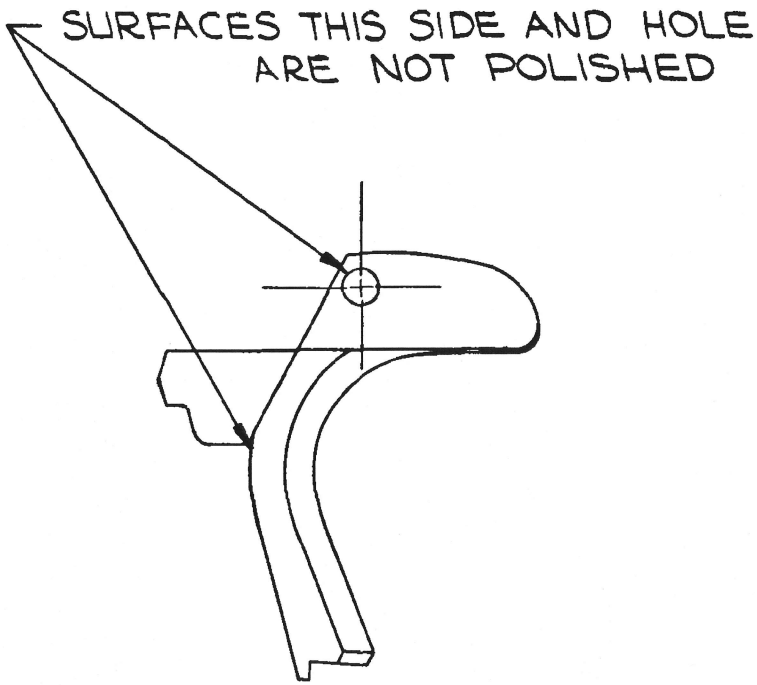

ALTERED ITEM DRAWING

PART NO. 12006313

MECHANICAL PROPERTIES	
YS MIN	
YS MAX	
EL 2	
RA	
BH	
RH	

F12006306	PISTOL, M15
NEXT ASSY	USED ON
APPLICATION	

UNLESS OTHERWISE SPECIFIED DIMENSIONS ARE IN INCHES
TOLERANCES:
ANGLES ±
3 PLACE DECIMALS ±
2 PLACE DECIMALS ±

MATERIAL

FINAL PROTECTIVE FINISH
SEE NOTE 3

CONTRACT NO:
DATE 19 JUN 73
PREP MIERZWA
CHK R. W. Armor
ENGR E. Winter
SUBMITTED E. Winter
APPROVED D. A. Cole

DEPT OF THE ARMY
U.S. ARMY WEAPONS COMMAND
ROCK ISLAND, ILLINOIS, 61201

SAFETY, GRIP

SIZE	CODE IDENT NO.	DRAWING NO.
B	19204	12006313

SCALE 2/1 SHEET 1 OF 1

REVISIONS					
MF	ZONE	LTR	DESCRIPTION	DATE	APPROV

NOTES:

1. MATERIAL: WIRE, STEEL, MUSIC, SPEC. QQ-W-470.

WIRE DIAMETER	.040
COIL DIAMETER(O.D.)	.420
FREE LENGTH	5.2 (APPROX)
TOTAL COILS	20 REF
DIRECTION OF HELIX	OPTIONAL
LOAD AT COMPRESSED LENGTH OF 3.037	6.5 LB ± .6
LOAD AT COMPRESSED LENGTH OF .867	13.7 LB ± 1.4
SPRING RATE	3.33 LB/IN REF
SOLID LENGTH	.84 MAX.
TYPE OF ENDS	PLAIN

MANUFACTURE IN ACCORDANCE WITH TYPE I, GRADE A, MIL-S-13572

PART NO. 12006314

MECHANICAL PROPERTIES					
YS MIN					
YS MAX					
EL 2					
RA					
BH		F12006306	PISTOL, M15		
RH		NEXT ASSY	USED ON		
		APPLICATION			

UNLESS OTHERWISE SPECIFIED DIMENSIONS ARE IN INCHES
TOLERANCES:
ANGLES ±
3 PLACE DECIMALS ±.005
2 PLACE DECIMALS ±

MATERIAL: SEE NOTE 1

FINAL PROTECTIVE FINISH

CONTRACT NO:
DATE 19 JUN 73
PREP
CHK
ENGR
SUBMITTED
APPROVED

DEPT OF THE ARMY
U.S. ARMY WEAPONS COMMAND
ROCK ISLAND, ILLINOIS, 61201

SPRING, HELICAL, COMPRESSION

SIZE	CODE IDENT NO.	DRAWING NO.
B	19204	12006314

SCALE NONE | SHEET 1 OF 1

AMSWE Form 402B 29 Jul 60

REVISIONS					
MF	ZONE	LTR	DESCRIPTION	DATE	APPROV

NOTES:

1. MAKE FROM PART 5013205, ALTER AS SHOWN.
2. FINISH 3.3.1 OF MIL-STD-171.
3. MIL-W-13855 APPLIES.

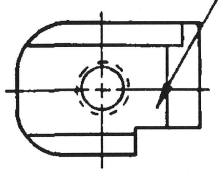

ABRASIVE BLAST THIS SURFACE USING 80 GRIT MATERIAL PRIOR TO APPLICATION OF PROTECTIVE FINISH

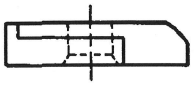

ALTERED ITEM DRAWING

PART NO. 12006315

MECHANICAL PROPERTIES			
YS MIN			
YS MAX			
EL 2			
RA			
BH		F12006306	PISTOL, M15
RH		NEXT ASSY	USED ON
		APPLICATION	

UNLESS OTHERWISE SPECIFIED DIMENSIONS ARE IN INCHES
TOLERANCES:
ANGLES ± ——
3 PLACE DECIMALS ± ——
2 PLACE DECIMALS ± ——

MATERIAL
——

FINAL PROTECTIVE FINISH
SEE NOTE 2

CONTRACT NO:
DATE 19 JUN 73
PREP
CHK
ENGR E. Winter
SUBMITTED E. Winter
APPROVED A. A. Cole

DEPT OF THE ARMY
U.S. ARMY WEAPONS COMMAND
ROCK ISLAND, ILLINOIS, 61201

STOP, FIRING PIN

SIZE	CODE IDENT NO.	DRAWING NO
B	19204	12006315

SCALE 2/1 | SHEET 1 OF 1

REVISIONS					
MF	ZONE	LTR	DESCRIPTION	DATE	APPRO

NOTES:

1. FINISH 125 √ ALL OVER
2. BREAK SHARP EDGES .005+.010
3. FINISH 3.3.1 OF MIL-STD-171. ABRASIVE BLAST USING 80 GRIT MATERIAL PRIOR TO FINISHING.
4. MAKE FROM PART NO. 6008596 ALTER AS SHOWN.
5. MIL-W-13855 APPLIES.

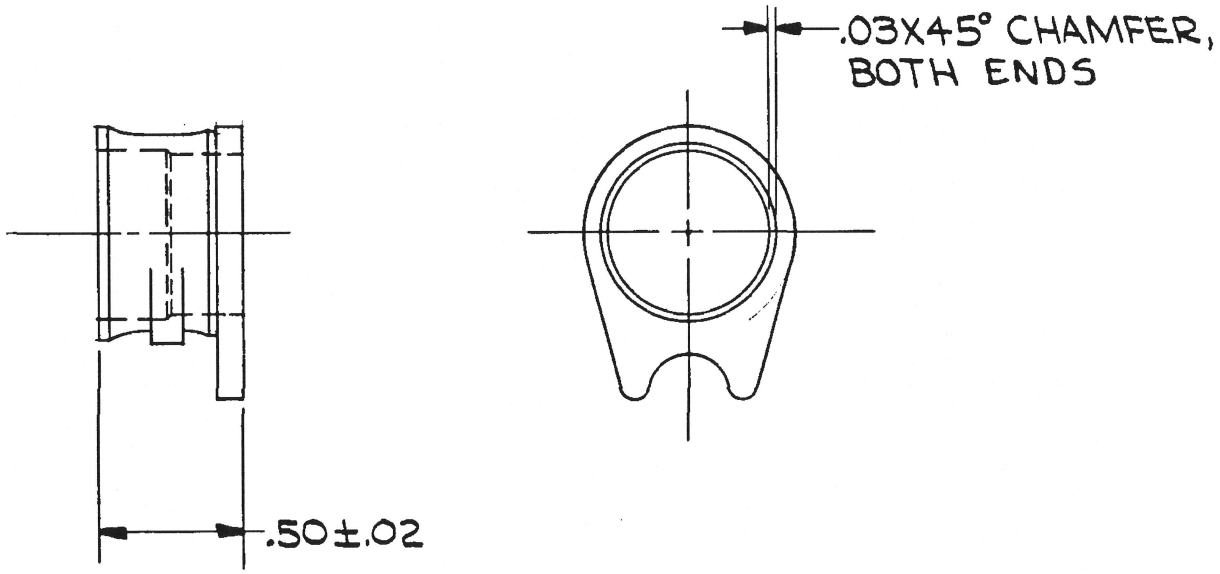

ALTERED ITEM DRAWING

PART NO. 12006316

MECHANICAL PROPERTIES					
YS MIN					
YS MAX					
EL 2					
RA		F12006306	PISTOL, M15		
BH		NEXT ASSY	USED ON		
RH		APPLICATION			

UNLESS OTHERWISE SPECIFIED DIMENSIONS ARE IN INCHES
TOLERANCES:
ANGLES ± 2°
3 PLACE DECIMALS ±
2 PLACE DECIMALS ± .02

MATERIAL

FINAL PROTECTIVE FINISH
SEE NOTE 3

CONTRACT NO:
DATE 19 JUN 73
PREP MIERZWA
CHK
ENGR E. Winter
SUBMITTED E. Winter
APPROVED A. A. Cole

DEPT OF THE ARMY
U.S. ARMY WEAPONS COMMAND
ROCK ISLAND, ILLINOIS, 61201

BUSHING, BARREL

SIZE	CODE IDENT NO.	DRAWING NO
B	19204	12006316

SCALE 2/1 SHEET 1 OF

EDITION OF 29 JUL 69 MAY BE USED

REVISIONS					
MF	ZONE	LTR	DESCRIPTION	DATE	APPRO

NOTES:

1. MAKE FROM PART 6008609, ALTER AS SHOWN.
2. FINISH 3.3.1 OF MIL-STD-171.
3. MIL-W-13855 APPLIES.

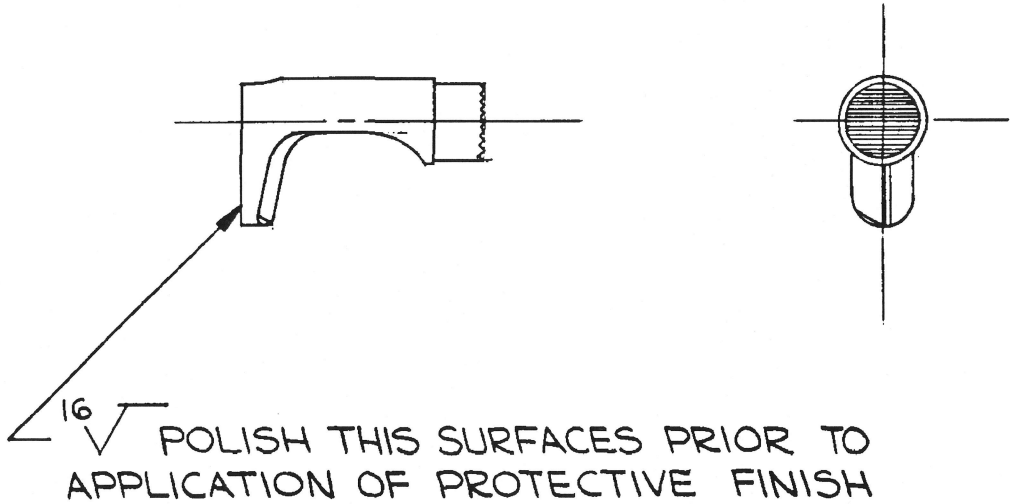

ALTERED ITEM DRAWING

PART NO. 12006317

MECHANICAL PROPERTIES				
YS MIN				
YS MAX				
EL 2				
RA				
BH		F12006306	PISTOL, M15	
RH		NEXT ASSY	USED ON	
		APPLICATION		

UNLESS OTHERWISE SPECIFIED DIMENSIONS ARE IN INCHES
TOLERANCES:
ANGLES ±
3 PLACE DECIMALS ±
2 PLACE DECIMALS ±

MATERIAL

FINAL PROTECTIVE FINISH
SEE NOTE 2

CONTRACT NO:
DATE 19 JUN 73
PREP MIERZWA
CHK R. V. A. Conrad
ENGR E. Winter
SUBMITTED E. Winter
APPROVED D. A. Cole

DEPT OF THE ARMY
U.S. ARMY WEAPONS COMMAND
ROCK ISLAND, ILLINOIS, 61201

CATCH, MAGAZINE

SIZE	CODE IDENT NO.	DRAWING NO.
B	19204	12006317
SCALE 2/1		SHEET 1 OF

EDITION OF 20 JUL 69 MAY BE USED

REVISIONS					
MF	ZONE	LTR	DESCRIPTION	DATE	APPROV

NOTES:

1. MAKE FROM PART NO. 6008598, ALTER AS SHOWN.
2. FINISH 3.3.1 OF MIL-STD-171
3. MIL-W-13855 APPLIES

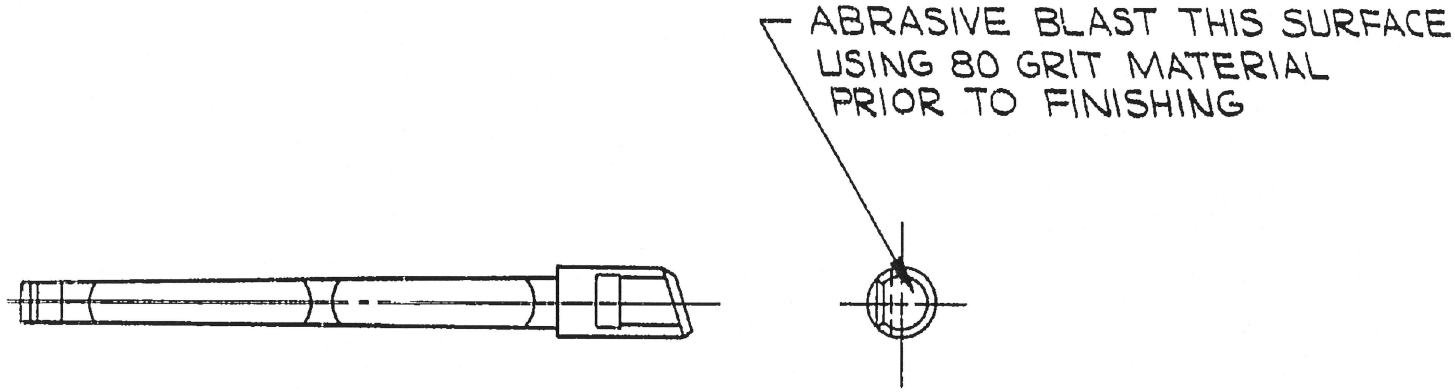

ALTERED ITEM DRAWING

PART NO. 12006318

MECHANICAL PROPERTIES	
YS MIN	
YS MAX	
EL 2	
RA	
BH	
RH	

NEXT ASSY	USED ON
F12006306	PISTOL, MIS

APPLICATION

UNLESS OTHERWISE SPECIFIED DIMENSIONS ARE IN INCHES
TOLERANCES:
ANGLES ±
3 PLACE DECIMALS ±
2 PLACE DECIMALS ±

MATERIAL

FINAL PROTECTIVE FINISH
SEE NOTE 2

CONTRACT NO.
DATE 19 JUN 73
PREP MIERZWA
CHK
ENGR
SUBMITTED
APPROVED

DEPT OF THE ARMY
U.S. ARMY WEAPONS COMMAND
ROCK ISLAND, ILLINOIS, 61201

EXTRACTOR

SIZE	CODE IDENT NO.	DRAWING NO.
B	19204	12006318

SCALE | SHEET OF

REVISIONS					
MF	ZONE	LTR	DESCRIPTION	DATE	APPRO

NOTES:

1. MAKE FROM PART 5503839, ALTER AS SHOWN.
2. FINISH 3.3.1 OF MIL-STD-171 EXCEPT AS NOTED. ABRASIVE BLAST UNPOLISHED SURFACE USING 80 GRIT MATERIAL PRIOR TO FINISHING.
3. MIL-W-13855 APPLIES.

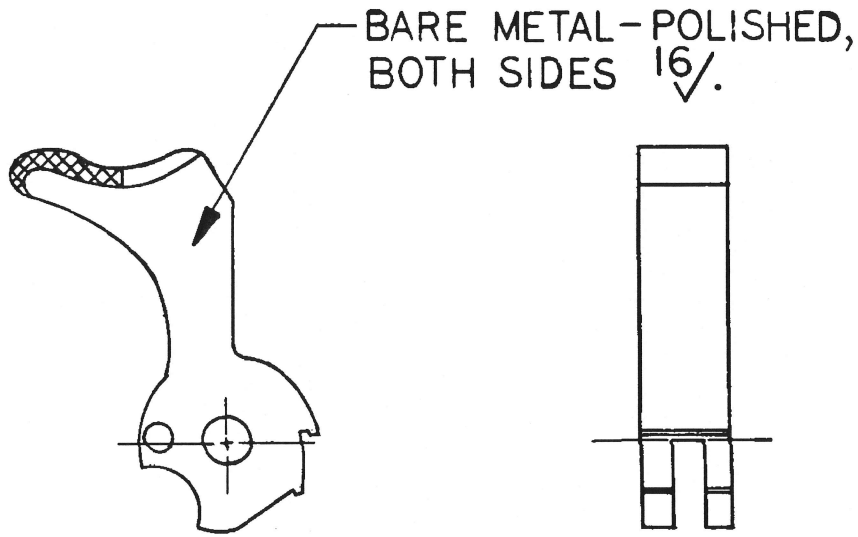

ALTERED ITEM DRAWING

PART NO. 12006319

MECHANICAL PROPERTIES	
YS MIN	
YS MAX	
EL 2	
RA	
BH	
RH	

NEXT ASSY	USED ON
F12006306	PISTOL, M15

APPLICATION

UNLESS OTHERWISE SPECIFIED DIMENSIONS ARE IN INCHES
TOLERANCES:
ANGLES ± ——
3 PLACE DECIMALS ± ——
2 PLACE DECIMALS ± ——

MATERIAL ——

FINAL PROTECTIVE FINISH SEE NOTE 2

CONTRACT NO.
DATE 19 JUN 73
PREP
CHK
ENGR E. Winter
SUBMITTED E. Winter
APPROVED

DEPT OF THE ARMY
U.S. ARMY WEAPONS COMMAND
ROCK ISLAND, ILLINOIS, 61201

HAMMER

SIZE	CODE IDENT NO.	DRAWING NO.
B	19204	12006319

SCALE 2/1 SHEET 1 OF 1

EDITION OF 20 JUL 69 MAY BE USED

REVISIONS					
MF	ZONE	LTR	DESCRIPTION	DATE	APPRO

NOTES:

1. MAKE FROM PART 5503840, ALTER AS SHOWN
2. POLISHED SURFACES TO BE 16 √
3. FINISH 3.3.1 OF MIL-STD-171.
4. MIL-W-13855 APPLIES.

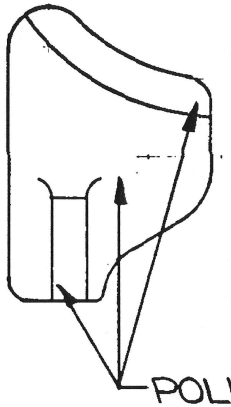

ALTERED ITEM DRAWING

PART NO. 12006320

MECHANICAL PROPERTIES					
YS MIN					
YS MAX					
EL 2					
RA					
BH		F12006306	PISTOL, MIS		
RH		NEXT ASSY	USED ON		
		APPLICATION			

UNLESS OTHERWISE SPECIFIED DIMENSIONS ARE IN INCHES
TOLERANCES:
ANGLES ±
3 PLACE DECIMALS ±
2 PLACE DECIMALS ±

MATERIAL

FINAL PROTECTIVE FINISH
SEE NOTE 3

CONTRACT NO:
DATE 19 JUN 73

PREP	MIERZWA
CHK	R. W. DeArmond
ENGR	E. Winter
SUBMITTED	E. Winter
APPROVED	A. A. Cole

DEPT OF THE ARMY
U.S. ARMY WEAPONS COMMAND
ROCK ISLAND, ILLINOIS, 61201

LOCK, SAFETY

SIZE	CODE IDENT NO.	DRAWING NO.
B	19204	12006320
SCALE		SHEET OF

AMSWE Form 402B, 12 Nov 70 EDITION OF 29 JUL 69 MAY BE USED

REVISIONS					
MF	ZONE	LTR	DESCRIPTION	DATE	APPROV

NOTES:

1. MAKE FROM PART NO. 6008595, ALTER AS SHOWN.
2. FINISH 3.3.1 OF MIL-STD-171.
3. MIL-W-13855 APPLIES.

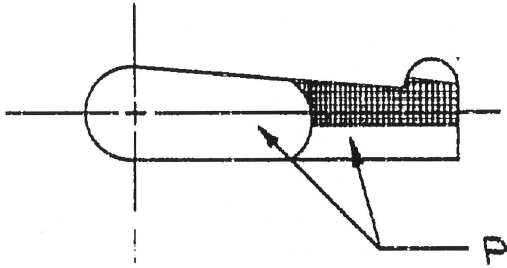

POLISH THESE SURFACES TO 16 √ BEFORE FINISHING

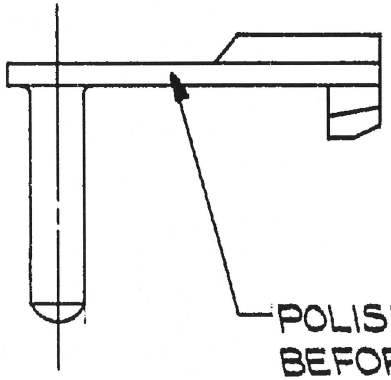

POLISH THIS SURFACE ALL AROUND TO 16 √ BEFORE FINISHING

ALTERED ITEM DRAWING

PART NO. 12006321

MECHANICAL PROPERTIES					
YS MIN					
YS MAX					
EL 2					
RA					
BH		F12006306	PISTOL, M15		
RH		NEXT ASSY	USED ON		
		APPLICATION			

UNLESS OTHERWISE SPECIFIED DIMENSIONS ARE IN INCHES
TOLERANCES:
ANGLES ±
3 PLACE DECIMALS ±
2 PLACE DECIMALS ±

MATERIAL

FINAL PROTECTIVE FINISH
SEE NOTE 2

CONTRACT NO
DATE 19 JUN 73
PREP MIERZWA
CHK R. D. Richmond
ENGR E. Winter
SUBMITTED E. Winter
APPROVED D. A. Cole

DEPT OF THE ARMY
U.S. ARMY WEAPONS COMMAND
ROCK ISLAND, ILLINOIS, 61201

STOP, SLIDE

SIZE	CODE IDENT NO.	DRAWING NO.
B	19204	12006321
SCALE		SHEET OF

REVISIONS					
MF	ZONE	LTR	DESCRIPTION	DATE	APPRO

NOTES:

1. FINISH 125 √ ALL OVER
2. BREAK SHARP EDGES .005+.010.
3. ABRASIVE BLAST USING 80 GRIT MATERIAL PRIOR TO FINISHING
4. FINISH 3.3.1 OF MIL-STD-171
5. MAKE FROM PART NO. 5013201 ALTER AS SHOWN.
6. MIL-W-13855 APPLIES.

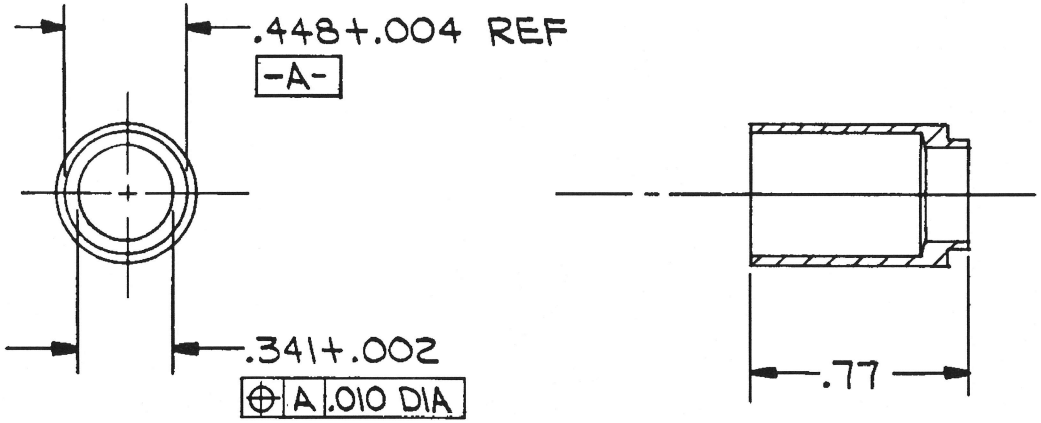

ALTERED ITEM DRAWING

PART NO. 12006323

MECHANICAL PROPERTIES					
YS MIN					
YS MAX					
EL 2					
RA					
BH		F12006306	PISTOL, M15		
RH		NEXT ASSY	USED ON		
		APPLICATION			

UNLESS OTHERWISE SPECIFIED DIMENSIONS ARE IN INCHES
TOLERANCES:
ANGLES ±
3 PLACE DECIMALS ±
2 PLACE DECIMALS ±

MATERIAL

FINAL PROTECTIVE FINISH
SEE NOTE 4

CONTRACT NO:
DATE 19 JUN 73
PREP MIERZWA
CHK R. W. Clemmons
ENGR E. Winter
SUBMITTED E. Winter
APPROVED A. A. Cole

DEPT OF THE ARMY
U.S. ARMY WEAPONS COMMAND
ROCK ISLAND, ILLINOIS, 61201

PLUG, RECOIL SPRING

SIZE	CODE IDENT NO.	DRAWING NO.
B	19204	12006323

SCALE 2/1 SHEET 1 OF 1

AMSWE Form 4038, 13 Nov 70 EDITION OF 29 JUL 69 MAY BE USED

REVISIONS				
MF	ZONE	LTR	DESCRIPTION	DATE

NOTES:
1. FINISH 125√ ALL OVER UNLESS OTHERWISE SPECIFIED.
2. BREAK ALL SHARP EDGES .005 +.010.
3. FINISH 1.2.1.1 OF MIL-STD-171 ON ALL EXTERIOR SURFACES .0004 MAX THICKNESS.
4. MAKE FROM PART NO 7791193, ALTER AS SHOWN.
5. MIL-W-13855 APPLIES.

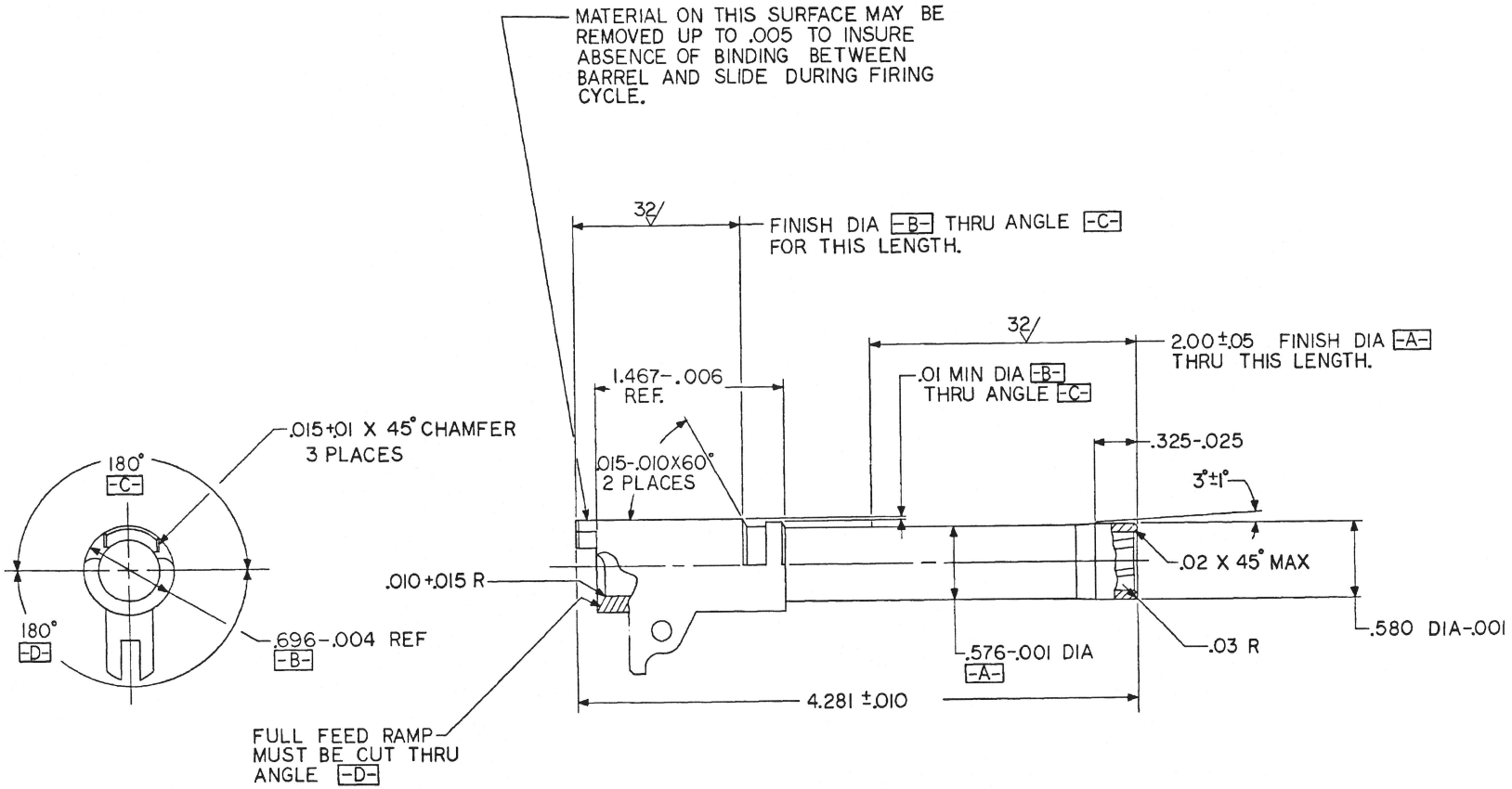

ALTERED ITEM DRAWI

PART NO. 12006325

MECHANICAL PROPERTIES					
YS MIN					
YS MAX					
EL 2					
RA					
BH					
RH			F12006306	PISTOL, M15	
			NEXT ASSY	USED ON	
			APPLICATION		

UNLESS OTHERWISE SPECIFIED DIMENSIONS ARE IN INCHES
TOLERANCES:
ANGLES ± 2°
3 PLACE DECIMALS ±
2 PLACE DECIMALS ±.01

MATERIAL

FINAL PROTECTIVE FINISH
SEE NOTE 3

CONTRACT NO:

DATE 19 JUNE 73

PREPARED
CHECKED
ENGINEER
SUBMITTED
APPROVED

DEPT OF THE ARMY
US. ARMY WEAPONS COMMA
ROCK ISLAND, ILLINOIS, 61

BARREL

SIZE	CODE IDENT NO.	DRAWING NO.
D	19204	12006

SCALE 2/1

SHEE

AMSWE Form 4030, 12 Nov 70

REVISIONS				
MF	ZONE	LTR	DESCRIPTION	DATE

NOTES:
1. FINISH 125√ ALL OVER UNLESS OTHERWISE SPECIFIED.
2. BREAK ALL SHARP EDGES .005 +.010.
3. FINISH 1.2.1.1 OF MIL-STD-171 ON ALL EXTERIOR SURFACES .0004 MAX THICKNESS.
4. MAKE FROM PART NO 7791193, ALTER AS SHOWN.
5. MIL-W-13855 APPLIES.

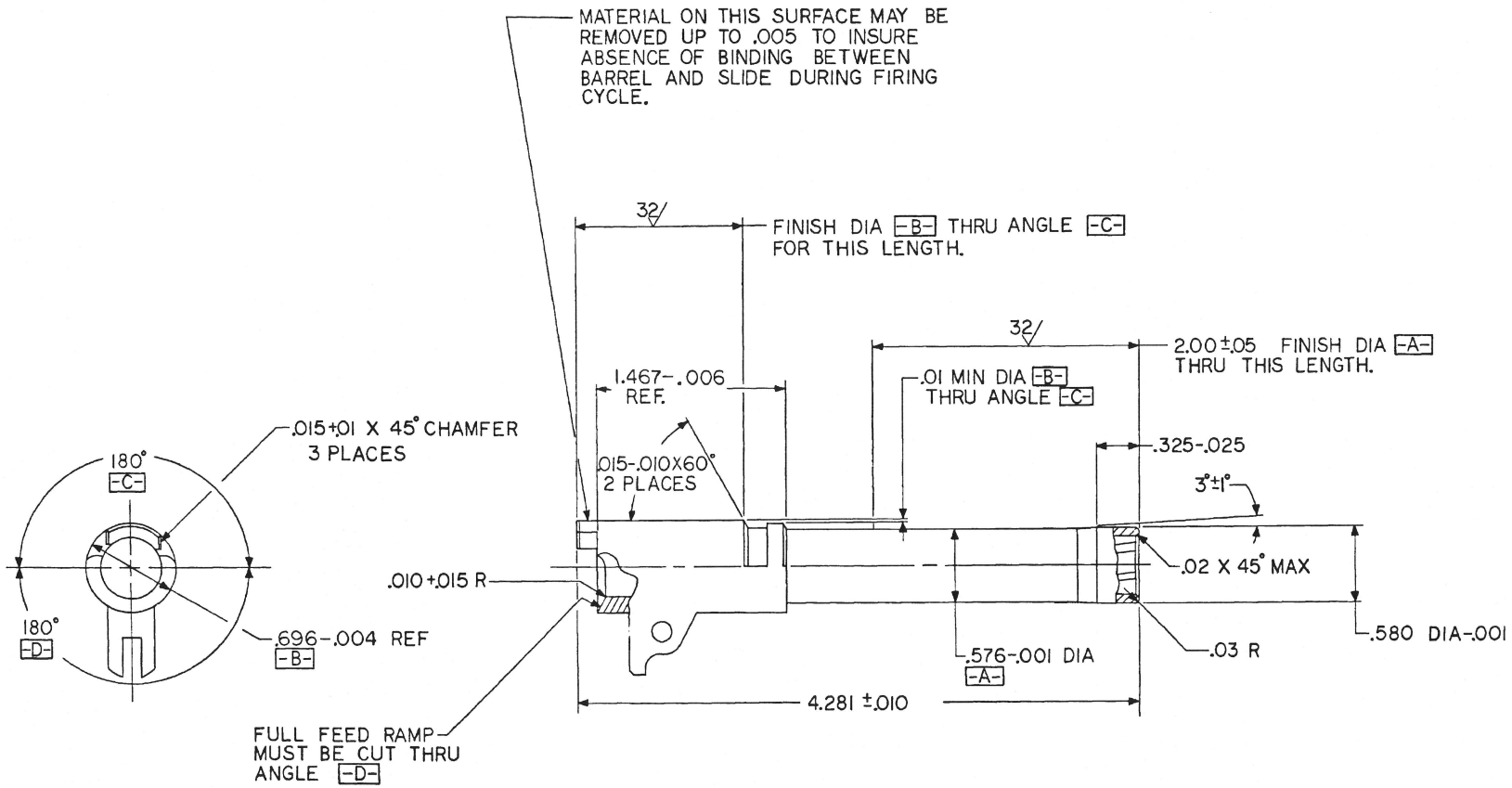

ALTERED ITEM DRAWIN

PART NO. 12006325

MECHANICAL PROPERTIES	
YS MIN	
YS MAX	
EL 2	
RA	
BH	
RH	

NEXT ASSY	USED ON
F12006306	PISTOL, M15
APPLICATION	

UNLESS OTHERWISE SPECIFIED DIMENSIONS ARE IN INCHES
TOLERANCES:
ANGLES ± 2°
3 PLACE DECIMALS ±
2 PLACE DECIMALS ±.01

MATERIAL: ——

FINAL PROTECTIVE FINISH: SEE NOTE 3

CONTRACT NO:

DATE 19 JUNE 73

PREPARED
CHECKED
ENGINEER
SUBMITTED
APPROVED

DEPT OF THE ARMY
U.S. ARMY WEAPONS COMMA
ROCK ISLAND, ILLINOIS, 612

BARREL

SIZE	CODE IDENT NO.	DRAWING NO.
D	19204	12006

SCALE 2/1 SHEET

AMSWE Form 4030, 12 Nov 70